General Specifications

pH and ORP Sensors

EXA PH

GS 12B07B02-E

■ GENERAL

Yokogawa's process pH and ORP meters are highly reliable and feature advanced functions which are useful for a wide variety of applications including water quality management in a broad range of production processes and medium-sized wastewater treatment plants, or for general pH and ORP control systems. Based on Yokogawa's track record and years of experience, a comprehensive range of products has been produced to provide solutions best suited to individual applications.

In addition to the PH8EFP and PH8ERP standard Ryton pH sensors, our line of pH sensors has been strengthened by the inclusion of the solid electrolyte pH sensor HA405, pH sensor for chemical processes DPA405, pH sensor and hydrofluoric acid-resistant pH sensor HF405 to cope with applications where standard sensors cannot be used. For reliable measurement of pH of high purity water in boilers and semiconductor process applications, the pH sensor PH8EHP and holder PH8HH are offered.

Like the pH sensor series, the ORP sensor series is also offered as a complete lineup with the solid electrolyte ORP sensor HA485, ORP sensor for chemical processes DPA485 in addition to the OR8EFG and OR8ERG standard Ryton ORP sensors.

■ FEATURES

Ryton pH/ORP Sensors PH8EFP, PH8ERP, OR8EFG, OR8ERG

- With the body made of Ryton, a strong engineering plastic, which is comparable to Teflon in terms of corrosion resistance and heat resistance, it allows for a wide range of applications.
- A single type of sensor can support all applications regardless of whether a holder or cleaner is used.
- The integrated-sensor design simplifies calibration with standard solutions and maintenance.
- The pH glass electrode of a pH sensor, the platinum or gold electrode of a ORP sensor and junction can be individually replaced.

Solid Electrolyte pH/ORP Sensors (Xerolyt) : HA405, HA485

- Allows pH measurement under severe conditions, such as where the process fluid is heavily contaminated or contains sulfide.
- With solid polymer used as the inner solution, the liquid junction is large (1.0 to 1.5 mm), which prevents clogging.

pH/ORP Sensors for Chemical Processes : DPA405, DPA485

- Extremely long life span for pH measurement in electrolytic processes.
- With the pressurized inner solution there is no need for a pressure holder.
- The silver barrier incorporated in the reference electrode inhibits the generation of sulfide around the liquid junction.

Hydrofluoric Acid-Resistant pH Sensor (HF405)

- The special sensing membrane allows measurement of solutions or drainage containing hydrofluoric acid.
- With solid polymer used as the inner solution, the liquid junction for the process fluid is large (1.0 to 1.5 mm), which prevents clogging.

pH Sensor for High Purity Water: PH8EHP

- The dedicated holder provides solutions to problems that arise when measuring high-purity water.
- Combined with PH202, FLXA21, PH450G, compensates for the effect of fluid temperature.

YOKOGAWA ◆

Yokogawa Electric Corporation
2-9-32, Nakacho, Musashino-shi, Tokyo 180-8750, Japan
Tel.: 81-422-52-5617 Fax.: 81-422-52-6792

GS 12B07B02-E

7th Edition May 2015

■ SYSTEM CONFIGURATION

For the PH202, FLXA21 2-Wire Type pH/ORP transmitter, see GS 12B07D02-E, GS 12A01A02-01E and for the PH450G 4-Wire Type pH Converter, see GS 12B07C05-01E.

For the holders or cleaning devices, see GS 12J05C02-00E.

Fig. 1-a System Configuration (General Purpose, Non-Explosionproof Types)

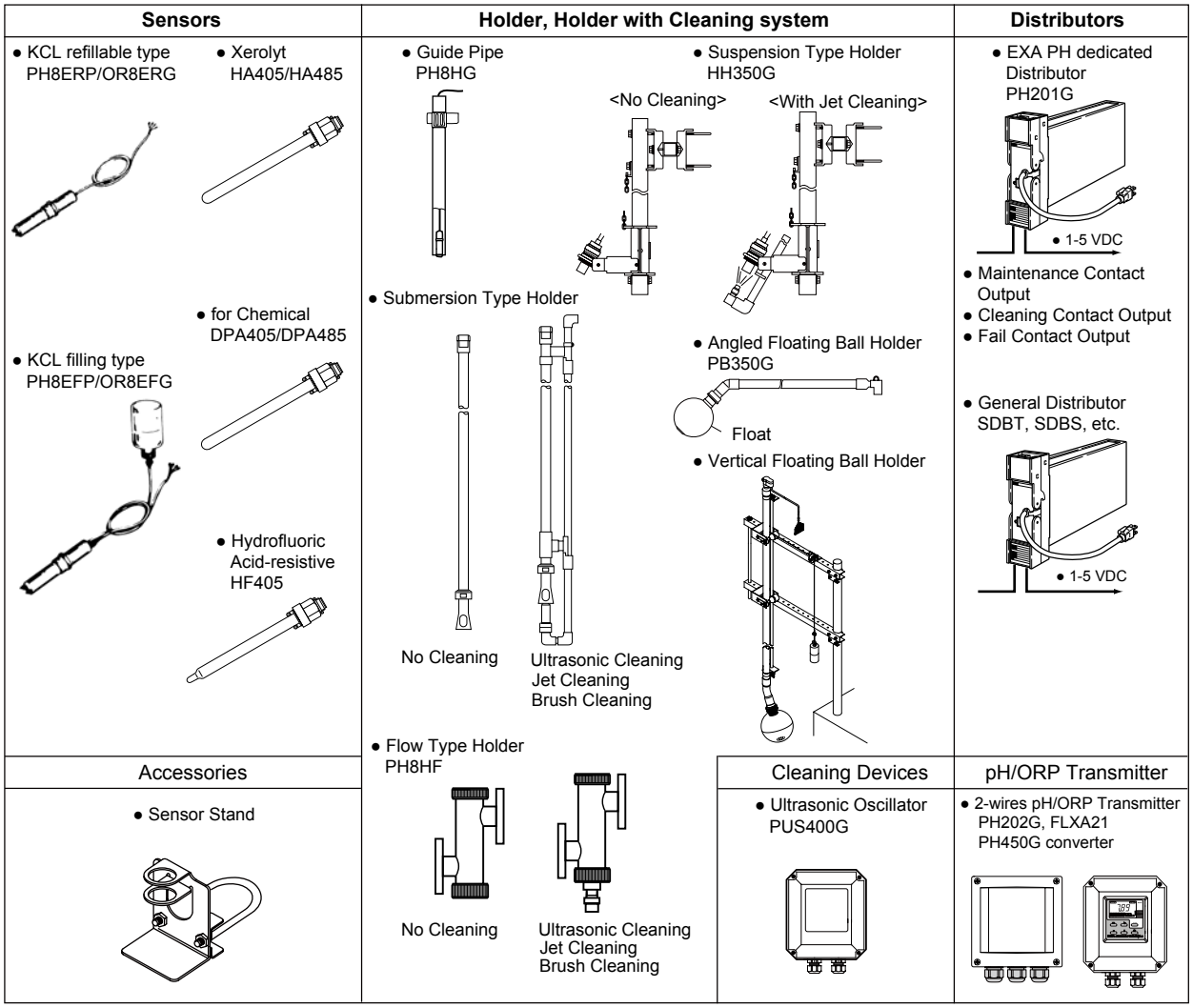

Fig. 1-b System Configuration (For Pure Water)

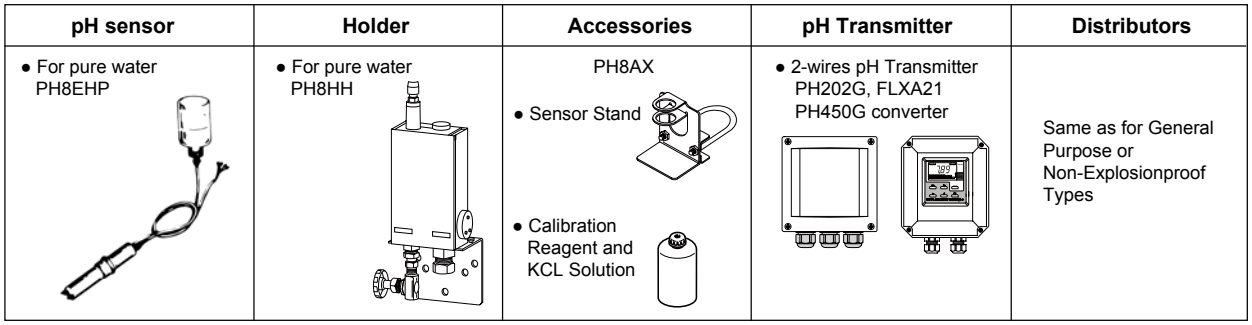

F01.ai

■ SPECIFICATIONS

1. pH Sensor

1-1. Common Specifications

Measured object :Hydrogen ion concentration (pH) in aqueous solution
Measurement principle :Glass electrode method
Measuring range :Different by used sensor
Measurement conditions :
Process temperature ;See Table 1
Process pressure ;See Table 2

Table 1. Process Temperature Range

pH Sensor	Holder Type *2	Holder Material *1	Cleaner	Adapter Material *1	pH Range	Temperature (°C)
PE8ERP	Guide-pipe (PH8HG)	PVC	None	Not used	2 to 12	-5 to 50
		PP	None			-5 to 80
	Submersion (PH8HS) Flow-through (PH8HF)	PP	None, Provided			-5 to 80
		SS	None, Provided			-5 to 80
	Suspension (HH350G)	SS	None, Provided			-5 to 80
	Float (PB350G, PB360G)	PP, SS	None			-5 to 50
PH8EFP	Guide-pipe (PH8HG)	PVC	None		2 to 12	-5 to 50
		PP	None			-5 to 80
	Submersion (PH8HS)	PP, SS	None		0 to 14	-5 to 100
			Provided			-5 to 80
	Flow-through (PH8HF)	PP	None, Provided			-5 to 80
		SS	None			-5 to 105
			Provided			-5 to 80
	Suspension (HH350G)	SS	None, Provided			-5 to 80
	Float (PB350G, PB360G)	PP, SS	None			-5 to 50
PH8EHP	High purity water(PH8HH)	Acryl	None		2 to 12	0 to 50
HA405 *3 DPA405 *3 HF405 *3	Submersion (PH8HS)	PP, SS	None	PVC	HA405 2 to 14 DPA405 0 to 14 HF405 2 to 11	0 to 50
				PP,SS		0 to 100
			Provided	PVC		0 to 50
				PP,SS		0 to 80
	Flow-through (PH8HF)	PP	None, Provided	PVC		0 to 50
				PP,SS		0 to 80
		SS	None	PVC		0 to 50
				PP		0 to 80
				SS		0 to 100
			Provided	PP,SS		0 to 80
				PVC		0 to 50

Note: PV:Rigid Polyvinyl, PP: Polypropylene, SS: Stainless Steel

*1 Stainless steel holder and Stainless steel adapter should be used when the pH value of the solution is pH3 or more acidic.
*2 For flow-through types, refer also to the solution temperature and pressure diagram of Holder GS 12J05C02-00E.
*3 Only jet cleaning system can be used for HA405, DPA405 or HF405.

Table 2. Process Pressure Range

pH Sensor / Holder	PH8ERP	PH8EFP	HA405 HF405	DPA405 *2
Submersion	Atmospheric pressure(Submersion depth: Max. 3m)			
Guide-pipe Suspension Float	Atmospheric pressure (Submersion depth: Max.3m)		Not used	
Flow-through *1	Atmospheric pressure to 50kPa	Atmospheric pressure to 10kPa *3	Atmospheric pressure to 500kPa	Atmospheric pressure to 250kPa
		Atmospheric pressure to 500kPa *4		

*1 For flow-through types, refer also to the solution temperature and pressure diagram of Holder GS 12J05C02-00E.
*2 Available measuring pressure decreases when the inner pressure of DPA405 decreases.
*3 When general purpose reserve tank used.
*4 When medium-pressure reserve tank used.

Table 3. Selection for pH Sensor

pH Sensor / Application	PH8ERP PH8EFP	PH8EHP	HA405	DPA405	HF405
General purpose	○	×	—	—	—
High purity water	×	○	×	×	×
Contaminating and sulfide-containing solutions	×	×	○	×	×
Caustic electrolysis solutions Solutions containing organic solvents	×	×	×	○	×
Waste water containing hydrofluoric acid *1	×	×	×	×	○

*1 Confirm the specifications of hydrofluoric acid concentration upper limit.
Note: Consult sales personnel about selection for pH sensor because the table above is just for reference.

1-2. KCl Refillable Type Sensor (PH8ERP)

Measuring range: pH2 to 12
Measuring temperature: -5 to 80°C
(See Table 1 when using holder)
Measuring pressure: Atmospheric pressure to 50 kPa
(See Table 2 when using holder)
Temperature compensation sensor: Pt1000
Wetted part materials:
Body; Ryton (PPS resin), glass, titanium or Hastelloy C, ceramics, fluorocarbon rubber or Daielperfrow rubber
Cable; Chlorinated polyethylene rubber (Cable sheath)
Weight: Approx. 0.4 kg

1-3. KCl Filling Type Sensor PH8EFP

Measuring range: pH0 to 14
Measuring temperature: -5 to 105°C
(-5 to 80°C when using Guide-pipe holder)
(See Table 1 when using holder)
Measuring pressure:
Atmospheric pressure to 10 kPa
(General purpose or big volume tank 500 mL)
(See Table 2 when using holder)
Atmospheric pressure to 500 kPa
(Medium pressure)
(See Table 2 when using holder)
Temperature compensation sensor: Pt1000

Wetted part materials:
Body; Ryton (PPS resin), glass, titanium or Hastelloy C, ceramics, teflon, fluorocarbon rubber or Daielperfrow rubber
Cable; Chlorinated polyethylene rubber (Cable sheath)
KCl tube; Heat-resistant soft PVC (General purpose or big volume tank 500mL), Polyethylene (Medium pressure)
Weight: Sensor; Approx. 0.4 kg,
Tank; Approx. 0.3 kg (General purpose), Approx. 1 kg (Medium pressure), Approx. 0.8 kg (Big-volume)

1-4. Solid Electrolyte pH Sensor (Xerolyt) HA405

Measuring range: pH2 to 14
Measuring temperature:
0 to 110°C (See Table 1 when using holder)
Measuring pressure:
Atmospheric pressure to 1.6MPa (Temperature 25°C)
Atmospheric pressure to 600kPa (Temperature 100°C)
(See Table 2 when using holder)
Internal electrolyte: Solid polymer including KCl (Xerolyt)
Temperature compensation sensor: None
(Manual temperature compensation on the converter or transmitter)
(Use the adapter with temperature sensor SA405 for application where the temperature varies)
Applicable holder:
Flow-through holder (PH8HF),
Submersion holder (PH8HS)
(An optional adapter is needed, but not needed when using the adapter with temperature sensor SA405).
Ultrasonic cleaning is not available.
Only jet cleaning is available when cleaning is necessary.
Wetted part materials:
Body ; Glass
O-ring ; Silicon rubber or Daielperfrow rubber
Adapter ; Stainless steel (316 SS), polypropylene or rigid polyvinyl chloride
CAUTION ON USE:
This sensor cannot be used outdoors, even when using with a holder, this sensor cannot be used outdoors due to exposure to rain or due to condensation at a high humid place.
This sensor cannot be used with a guide-pipe holder.
The sensor must be installed in a vertical position. It can not be installed from below and in a horizontal position, either.
The sensor may not stand a long-term use in solutions containing organic solvents because of the erosion of its internal electrolyte polymer.

1-5. pH Sensors for Chemical Processes (DPA405)

Measuring range: pH0 to 14
Measuring temperature:
0 to 100°C
(See Table 1 when using holder)
Measuring pressure:
Atmospheric pressure to 250 kPa
(Depending on the inner pressure of the sensor)
(See Table 2 when using holder)
Internal electrolyte: High-viscosity gel
Temperature compensation sensor: None
(Manual temperature compensation on the converter or transmitter)
(Use adapter with temperature sensor (SA405) for application where the temperature varies)
Applicable holder:
Flow-through holder (PH8HF),
Submersion holder (PH8HS)
(An optional adapter is needed, but not needed when using an adapter with temperature sensor SA405.)
Ultrasonic cleaning is not available.
Only jet cleaning is available when cleaning is necessary.
Use O-ring covered by Teflon (K9148MR) when using a special holder for electrolytic processes
Wetted part materials:
Body; Glass
O-ring; Silicon rubber or Daielperfrow rubber
Adapter; Stainless steel (316 SS), polypropylene, rigid polyvinyl chloride, heat-resistant polyvinyl chloride or titanium
CAUTION ON USE:
This sensor cannot be used outdoors, even when using with a holder, this sensor cannot be used outdoors due to exposure to rain or due to condensation at a high humid place.
This sensor cannot be used with a guide-pipe holder.
The sensor must be installed in a vertical position. It can not be installed from below and in a horizontal position, either.

1-6. Hydrofluoric Acid-Resistant pH Sensor HF405

Measuring range: pH2 to 11
Upper limit of HF concentration:
Max. 1000 ppm at pH3 to 4
Max. 10000 ppm at pH4 to 5
No limit at pH5 or greater
Measuring temperature: 0 to 80°C
(See Table 1 when using holder)
Measuring pressure:
Atmospheric pressure to 1.6 MPa (Temperature 25°C)
Atmospheric pressure to 600 kPa (Temperature 100°C)
(See Table 2 when using holder)
Internal electrolyte: Solid polymer including KCl (Xerolyt)
Temperature compensation sensor: None
(Manual temperature compensation on the converter or transmitter)
(Use adapter with temperature sensor SA405 for application where the temperature varies)
Applicable holder:
Flow-through holder (PH8HF),
Submersion holder (PH8HS)
(An optional adapter is needed, but not needed when using the adapter with temperature sensor SA405)
Wetted part materials:
Body ; Glass. silicon rubber or Daielperfrow rubber
Adapter ; Stainless steel (316 SS), polypropylene or rigid polyvinyl chloride

CAUTION ON USE:
This sensor cannot be used outdoors, even when using with a holder, this sensor cannot be used outdoors due to exposure to rain or due to condensation at a high humid place.
This sensor cannot be used with a guide-pipe holder.
The sensor must be installed in a vertical position. It can not be installed from below and in a horizontal position, either.

1-7. Adapter with Temperature Sensor (SA405)

Applicable sensors: HA405, DPA405, HF405
Temperature sensor: Pt1000
Wetted part materials :
Stainless steel (316 SS) (Temperature sensor)- PEEK (Adapter), titanium, Hastelloy C
Applicable holder:
Flow-through holder (PH8HF),
Submersion holder (PH8HS)
(Note 1): Use O-ring covered by Teflon (K9148MR) when using a special holder for electrolytic processes.
(Note 2): Use special type terminal box "WTB10-PH2" for pin terminal of PH202 or FLXA21,use "WTB10-PH6" for M4 ring terminal of FLXA21.
Use special type M3 ring terminal box of "WTB10-PH4" for 4-wire type converter "PH450G" and 2-wire type transmitter "PH202/TB".

1-8. pH Sensor for Small Culture Tanks DPAS405

Measuring range: pH0 to 12
Measuring temperature: 0 to 100°C
(Applicable for autoclave)
Autoclave temperature: max. 130°C
Measuring pressure:
Atmospheric pressure to 250 kPa
Internal electrolyte: High-viscosity gel
Temperature compensation sensor: None
(Manual temperature compensation on the converter or transmitter)
Applicable holder: Silicon bush
(Note): Use silicon bush or socket (DIN Pg 13.5 female) for an insertion length of 120 mm and 200 mm.
Wetted part materials:
Body ; Glass
O-ring ; Silicon rubber or Daielperfrow
CAUTION ON USE:
This sensor cannot be used outdoors and with guide-pipe holder.
The sensor must be installed in a vertical position. It can not be installed from below and in a horizontal position, either.

2. ORP Sensor

2-1. Common Specifications

Measured object:
Oxidation-Reduction potential in aqueous solution
Measurement principle: Metal electrode method
Measuring range: -1500 to 1500 mV
Measurement conditions:
Process temperature: See Table 4
Process pressure: See Table 5

Table 4. Process Temperature Range

ORP Sensor	Holder Type *2	Holder Material *1	Cleaner	Adapter Material *1	Temperature (°C)
OR8ERG	Guide-pipe	PVC	None	Not used	-5 to 50
		PP	None		-5 to 80
	Submersion, Flow-through	PP	None, Provided		-5 to 80
		SS	None, Provided		-5 to 80
	Suspension	SS	None, Provided		-5 to 80
	Float	PP, SS	None		-5 to 50
OR8EFG	Guide-pipe	PVC	None		-5 to 50
		PP	None		-5 to 80
	Submersion	PP, SS	None		-5 to 100
			Provided		-5 to 80
	Flow-through	PP	None, Provided		-5 to 80
		SS	None		-5 to 105
			Provided		-5 to 80
	Suspension	SS	None, Provided		-5 to 80
	Float	PP, SS	None		-5 to 50
HA485 *3 DPA485 *3	Submersion	PP, SS	None	PVC	0 to 50
				PP, SS	0 to 100
			Provided	PVC	0 to 50
				PP, SS	0 to 80
	Flow-through	PP	None, Provided	PVC	0 to 50
				PVC	0 to 80
		SS	None	PVC	0 to 50
				PP	0 to 80
				SS	0 to 100
			Provided	PP, SS	0 to 80
				PVC	0 to 50

Note: PV:Rigid Polyvinyl, PP: Polypropylene, SS: Stainless Steel

*1 Stainless steel holder and Stainless steel adapter should be used when the pH value of the solution is pH3 or more acidic.
*2 For flow-through types, refer also to the solution temperature and pressure diagram of holders GS 12J05C02-00E.
*3 Only jet cleaning system can be used for HA485 or DPA485.

Table 5. Process Pressure Range

ORP Sensor / Holder	OR8ERG	OR8EFG	HA485	DPA485 *2
Submersion	Atmospheric pressure (Submersion depth: Max. 3 m)			
Guide-pipe Suspension Float	Atmospheric pressure (Submersion depth: Max. 3 m)		Not used	
Flow-through *1	Atmospheric pressure to 50 kPa	General purpose Atmospheric pressure to 10 kPa Medium pressure Atmospheric pressure to 500 kPa	Atmospheric pressure to 500 kPa	Atmospheric pressure to 250 kPa

*1: For flow-through types, refer also to the solution temperature and pressure diagram of Holder GS 12J05C02-E.
*2: Available measuring pressure decreases when the inner pressure of DPA405 decreases.

2-2. KCl Refillable Type Sensor OR8ERG

Measuring range: -1500 to 1500 mV
Measuring temperature: -5 to 80°C
(See Table 4 when using holder)
Measuring pressure: Atmospheric pressure to 50 kPa
(See Table 5 when using holder)
Wetted part materials:
Body; Ryton (PPS resin), platinum-glass or gold-epoxy resin, titanium, ceramics, fluorocarbon rubber
Cable; Chlorinated polyethylene rubber (Cable sheath)
Weight: Approx. 0.4 kg

2-3. KCl Filling Type Sensor OR8EFG

Measuring range: -1500 to 1500 mV
Measuring temperature: -5 to 105°C
(-5 to 80°C when using guide-pipe holder)
(See Table 4 when using holder)
Measuring pressure:
Atmospheric pressure to 10 kPa
(General purpose or big volume tank 500 mL)
(See Table 5 when using holder)
Atmospheric pressure to 500 kPa
(Medium pressure)
(See Table 5 when using holder)
Wetted part materials:
Body ; Ryton (PPS resin), platinum-glass or gold-epoxy resin, titanium or Hastelloy C, ceramics, fluorocarbon rubber
Cable ; Chlorinated polyethylene rubber (Cable sheath)
KCl tube ; Heat-resistant soft PVC (General purpose), Polyethylene (Medium pressure)
Weight:
Sensor; Approx. 0.4 kg
Tank; Approx. 0.3 kg (General purpose), Approx. 1 kg ((Medium pressure)

2-4. Solid Electrolyte ORP Sensor (Xerolyt) HA485

Measuring range: -1500 to 1500 mV
Process pH range: 2 to 14 pH
Measuring temperature: 0 to 110°C
(See Table 4 when using holder)
Measuring pressure:
Atmospheric pressure to 1.6MPa
(Temperature 25°C)
Atmospheric pressure to 600kPa
(Temperature 100°C)
(See Table 5 when using holder)
Internal electrolyte: Solid polymer including KCl (Xerolyt).
Applicable holder:
Flow-through holder (PH8HF),
Submersion holder (PH8HS)
(An optional adapter is needed)
Ultrasonic cleaning is not available.
Only jet cleaning is available when cleaning is necessary.
Wetted part materials:
Body; Platinum-glass, silicon rubber
Adapter; Stainless steel (316 SS), polypropylene or rigid polyvinyl chloride
CAUTION ON USE:
This sensor cannot be used outdoors, even when using with a holder, this sensor cannot be used outdoors due to exposure to rain or due to condensation at a high humid place.
This sensor cannot be used with a guide-pipe holder.
The sensor must be installed in a vertical position. It can not be installed from below and in a horizontal position, either.

2-5. ORP Sensors for Chemical Processes DPA485

Measuring range: -1500 to 1500 mV
Measuring temperature: 0 to 100°C
(See Table 4 when using holder)
Measuring pressure:
Atmospheric pressure to 250kPa
(See Table 5 when using holder)
Internal electrolyte: High-viscosity gel
Applicable holder:
Flow-through holder (PH8HF),
Submersion holder (PH8HS)
(An optional adapter is needed.)
Use O-ring covered by Teflon (K9148MR) when using a special holder for electrolytic processes
Wetted part materials:
Body; Platinum-glass, silicon rubber
Adapter; Stainless steel (316 SS), polypropylene, rigid polyvinyl chloride, heat-resistant polyvinyl chloride or titanium
CAUTION ON USE:
This sensor cannot be used outdoors, even when using with a holder, this sensor cannot be used outdoors due to exposure to rain or due to condensation at a high humid place.
This sensor cannot be used with a guide-pipe holder.
The sensor must be installed in a vertical position. It can not be installed from below and in a horizontal position, either.

2-6. ORP Sensor for Small Culture Tanks DPAS485

Measuring range: -1500 to 1500 mV
Measuring temperature: 0 to 100°C
(Applicable for autoclave)
Autoclave temperature: max. 130°C
Measuring pressure: Atmospheric pressure to 250 kPa
Internal electrolyte: High-viscosity gel
Applicable holder: Silicon bush
(Note): Use silicon bush or socket (DIN Pg13.5 female) for an insertion length of 120 mm and 200 mm.
Wetted part materials:
Body; Platinum-glass, silicon rubber
CAUTION ON USE:
This sensor cannot be used outdoors and with guide-pipe holder.
The sensor must be installed in a vertical position. It can not be installed from below and in a horizontal position, either.

3. pH Measuring System for High Purity Water

Use a holder for high purity water when using pH sensor for high purity water.

3-1. pH Sensor for High Purity Water PH8EHP

Measuring temperature: 0 to 50°C
Measuring pressure: Atmospheric pressure
Temperature compensation sensor: Pt1000
Measuring conductivity: See Fig. 2
Measuring flow rate: See Fig. 2
Wetted part materials:
Body; Ryton (PPS resin), glass, titanium or Hastelloy C, ceramics, fluorocarbon rubber
Cable; Chlorinated polyethylene rubber (Cable sheath)
KCl tube ; Heat-resistant soft PVC
Weight: Sensor ; Approx. 0.4 kg
Tank ; Approx. 0.3 kg (General purpose)

3-2. Holder for High Purity Water PH8HH

Material: Acrylic resin, 316 SS, chloroprene rubber
Process connections: Inlet ; Rc 1/4 or 1/4NPT (F)
Outlet ; Rc 1/2 or 1/2NPT (F)
Mounting Method:
50A (2-inch) vertical or horizontal pipe mounting (specify mounting bracket) or wall mounting (mounting bracket supplied with holder)
Weight: Body; Approx. 1.7 kg
Mounting Bracket; Approx. 0.7 kg

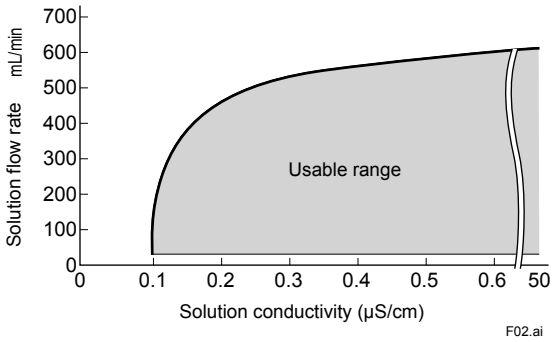

Fig.2 Solution flow rate and solution conductivity of sensor and holder for high purity water

4. Terminal Box

4-1. Terminal Box for General pH/ORP Sensors WTB10-PH1, -PH3, -PH5

Used when pH transmitter or converter is installed remotely from the pH or ORP sensor.

Ambient temperature: -10 to 50°C
Construction: JIS waterproof
Case material: Fiberglass reinforced polycarbonate resin
Case color: Grayish green (Munsell 2.5GY5.0/1.0)
Electrical connections:
pH sensor side;
Ø21mm hole (With G1/2 plastic gland)
pH Transmitter or Converter side;
Ø13mm hole (With G1/2 plastic gland)
With Cable (Maximum length 20 m)
Conduit adapter(optional)

4-2. Terminal Box for Special pH/ORP Sensors WTB10-PH2, -PH4, -PH6

Used when using pH transmitter or converter and adapter with temperature sensor SA405.

Ambient temperature: -10 to 50°C
Construction : JIS waterproof
Case material : Fiberglass reinforced polycarbonate resin
Case color : Grayish green (Munsell 2.5GY5.0/1.0)
Electrical connections:
pH sensor side:
Ø21mm hole (With G1/2 plastic gland)
pH Transmitter or Converter side:
Ø13mm hole (With G1/2 plastic gland)
With Cable (Maximum length 20m)
Conduit adapter(optional)
Temperature sensor side: Pg7 plastic gland

5. Accessories (Purchased Separately)

See Model and Suffix Codes.

■ Compliance with the simple apparatus requirements

PH8EFP, PH8ERP and PH8EHP meet the simple apparatus requirements defined in the following standards.

Note: TIIS certified types cannot be connected.

Use the sensors under the conditions of use required by the standards.

Applicable standards:

ANSI/ISA-60079-11 (2014)
ANSI/ISA-60079-0 (2009)
CAN/CSA-C22.2 NO. 60079-11:14
CAN/CSA-C22.2 NO. 60079-0:11
방호장치 의무안전인증 고시
GB 3836.4-2010

Conditions of use:

(1) Use in combination with an internally isolated transmitter, or use with, a transmitter in combination with isolated barrier.
The FLXA21 is internally isolated.

(2) Upper limit of the process temperature.
The upper limit of process temperature is indicated below when the sensor is used in combination with a YOKOGAWA transmitter.

For FLXA21, model and suffix code below is available.

FLXA21-D-□-D-EA-P1-○-A-N-LA-N-NN
□ can be any value.
○ must be NN or P1.
Any option code is available.

For PH202S, model and suffix code below is available.

PH202S-○-E
○ must be C or U.
There are no PH202S models that meet the Korean explosion proof standards.
Any option code is available.

- **Upper limit of process temperature on the PH8EFP**

Transmitter used in combination	FLXA21		PH202S	
Ambient temperature Ta / Temperature class	40°C	60°C	40°C	60°C
T6	16	16	28	28
T5	81	31	95 *1	43
T4	105	66	105	78
T3	105	105	105	105
T2	105	105	105	105
T1	105	105	105	105

*1: Care about upper limit 100°C of temperature class T5 should be taken.

- **Upper limit of process temperature on the PH8ERP**

Transmitter used in combination	FLXA21		PH202S	
Ambient temperature Ta / Temperature class	40°C	60°C	40°C	60°C
T6	16	16	28	28
T5	80	31	80	43
T4	80	66	80	78
T3	80	80	80	80
T2	80	80	80	80
T1	80	80	80	80

- **Upper limit of process temperature on the PH8EHP**

Transmitter used in combination	FLXA21		PH202S	
Ambient temperature Ta / Temperature class	40°C	60°C	40°C	60°C
T6	16	16	28	28
T5	50	31	50	43
T4	50	50	50	50
T3	50	50	50	50
T2	50	50	50	50
T1	50	50	50	50

Other warnings are provided in the user's manual.

■ MODEL AND SUFFIX CODES

1. pH Sensor

- **KCl Refillable Type pH Sensor**

Model	Suffix Code	Option Code	Specifications
PH8ERP	.....	.....	KCl Refillable Type pH Sensor
Cable Length	**-03**	.....	3m
	-05	.....	5m
	-07	.....	7m
	-10	.....	10m
	-15	.....	15m
	-20	.....	20m
Solution Ground Tip	**-TN**	.....	Titanium
	-HC	.....	Hastelloy C
–	**-N**	.....	Always -N
pH Measuring System	**-T**	.....	For PH200/PH400 *1
	-E	.....	For PH202/FLXA21 *2
	-F	.....	For FLXA21 *6
	-B	.....	For PH100 *3
	-G	.....	For PH450G,PH202/TB *5
Style	***A**	.....	Style A
Option O-ring		**/PF**	Daielperfrow *4

*1: Mark band is shown by mark and fork terminals are used.
*2: Mark band is shown by numeral and pin terminals are used.
*3: The tag which indicated the color, the sign, and the number is attached to the cable of a sensor.
*4: Choose Daielperfrow when this is used in organic solvent, high alkali or high temperature solution.
*5: Mark band is shown by numeral and M3 ring terminals are used. When terminal box is used, select WTB10-PH3.
*6: Mark band is shown by numeral and M4 ring terminals are used. When terminal box is used, select WTB10-PH5.

- **KCl Filling Type pH Sensor**

Model	Suffix Code	Option Code	Specifications
PH8EFP	.....	.....	KCl Filling Type pH Sensor
Cable Length and KCl Tube Length	**-03**	.....	3m
	-05	.....	5m
	-07	.....	7m
	-10	.....	10m
	-15	.....	15m
	-20	.....	20m
Solution Ground Tip	**-TN**	.....	Titanium
	-HC	.....	Hastelloy C
KCl Reserve Tank *1	**-TT1**	.....	For general purpose (250 mL solution inlet)
	-TT2	.....	For medium pressure *2
	-TT3	.....	Big volume tank (With 500 mL tank)
	-TN1	.....	For maintenance (for TT1, TT3)
	-TN2	.....	For maintenance (for TT2)
–	**-N**	.....	Always -N
pH Measuring System	**-T**	.....	For PH200/PH400 *3
	-E	.....	For PH202/FLXA21 *4
	-F	.....	For FLXA21 *10
	-B	.....	For PH100 *5
	-G	.....	For PH450G,PH202/TB *9
Style	***A**	.....	Style A
Option O-ring		**/PF**	Daielperfrow *6
Special glass electrode		**/HA**	Glass electrode for high alkali *7
Special junction		**/TF**	Teflon junction *8

*1: 2-inch pipe mounting bracket is supplied with TT1, TT2 and TT3. Only a supply tube, but no KCl solution, is supplied with TN1 and TN2. Since a KCl solution is not supplied with TT2, arrange it from among accessories or auxiliary parts.
*2: Prepare an air pressure regulator as shown in the diagram below when the medium-pressure reserve tank is used. To pH sensor, Regulator, (to be prepared separately)

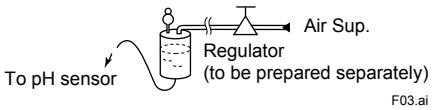

*3: Mark band is shown by mark and fork terminals are used.
*4: Mark band is shown by numeral and pin terminals are used.
*5: The tag which indicated the color, the sign, and the number is attached to the cable of a sensor.
*6: Choose Daielperfrow when this is used in organic solvent, high alkali or high temperature solution.
*7: Choose when using in high alkali solution.
*8: Choose when using in the heavily contaminated application.
*9: Mark band is shown by numeral and M3 ring terminals are used. When terminal box is used, select WTB10-PH3.
*10: Mark band is shown by numeral and M4 ring terminals are used. When terminal box is used, select WTB10-PH5.

● Solid Electrolyte pH Sensor (Xerolyt)

Model	Suffix Code	Option Code	Specifications
HA405	·····	·····	Solid electrolyte pH sensor
Insertion Length	**-120**	·····	120 mm
Option	For PH200/PH400 Cable Length *1	**/01**	1 m (Fork terminal)
		/03	3 m (Fork terminal)
		/05	5 m (Fork terminal)
		/10	10 m (Fork terminal)
		/15	15 m (Fork terminal)
		/20	20 m (Fork terminal)
	For PH202/FLXA21 Cable Length *2	**/01E**	1 m (Pin terminal)
		/03E	3 m (Pin terminal)
		/05E	5 m (Pin terminal)
		/10E	10 m (Pin terminal)
		/15E	15 m (Pin terminal)
		/20E	20 m (Pin terminal)
	For FLXA21 Cable Length *6	**/01F**	1 m (M4 ring terminal)
		/03F	3 m (M4 ring terminal)
		/05F	5 m (M4 ring terminal)
		/10F	10 m (M4 ring terminal)
		/15F	15 m (M4 ring terminal)
		/20F	20 m (M4 ring terminal)
	For PH450G, PH202/TB Cable Length *5	**/01G**	1 m (M3 ring terminal)
		/03G	3 m (M3 ring terminal)
		/05G	5 m (M3 ring terminal)
		/10G	10 m (M3 ring terminal)
		/15G	15 m (M3 ring terminal)
		/20G	20 m (M3 ring terminal)
	Adapter *3	**/S3**	Stainless steel
		/PP	Polypropylene
		/PV	Rigid polyvinyl-chloride
	O-ring	**/PF**	Daielperfrow *4

*1: Mark band is shown by mark and fork terminals are used.
*2: Mark band is shown by numeral and pin terminals are used.
*3: This is needed when using submersion type or flow-through type holder.
However this is not needed when using adapter with temperature sensor (SA405).
*4: Choose Daielperfrow when this is used in high alkali or high temperature alkaline solution.
*5: Mark band is shown by numeral and M3 ring terminals are used. When terminal box is used, select WTB10-PH4.
*6: Mark band is shown by numeral and M4 ring terminals are used. When terminal box is used, select WTB10-PH6.

● pH Sensors for Chemical Processes

Model	Suffix Code	Option Code	Specifications
DPA405	·····	·····	pH sensor for chemical process
Insertion Length	**-120**	·····	120 mm
Option	For PH200/ PH400 Cable Length *1	**/01**	1 m (Fork terminal)
		/03	3 m (Fork terminal)
		/05	5 m (Fork terminal)
		/10	10 m (Fork terminal)
		/15	15 m (Fork terminal)
		/20	20 m (Fork terminal)
	For PH202/ FLXA21 Cable Length *2	**/01E**	1 m (Pin terminal)
		/03E	3 m (Pin terminal)
		/05E	5 m (Pin terminal)
		/10E	10 m (Pin terminal)
		/15E	15 m (Pin terminal)
		/20E	20 m (Pin terminal)
	For FLXA21 Cable Length *6	**/01F**	1 m (M4 ring terminal)
		/03F	3 m (M4 ring terminal)
		/05F	5 m (M4 ring terminal)
		/10F	10 m (M4 ring terminal)
		/15F	15 m (M4 ring terminal)
		/20F	20 m (M4 ring terminal)
	For PH450G, PH202/TB Cable Length *5	**/01G**	1 m (M3 ring terminal)
		/03G	3 m (M3 ring terminal)
		/05G	5 m (M3 ring terminal)
		/10G	10m (M3 ring terminal)
		/15G	15m (M3 ring terminal)
		/20G	20m (M3 ring terminal)
	Adapter *3	**/S3**	Stainless steel
		/PP	Polypropylene
		/PV	Rigid polyvinyl-chloride
		/HPV	Heat-resistant polyvinyl-chloride
		/TN	Titanium
	O-ring	**/PF**	Daielperfrow *4

*1: Mark band is shown by mark and fork terminals are used.
*2: Mark band is shown by numeral and pin terminals are used.
*3: This is needed when using submersion type or flow-through type holder. However this is not needed when using adapter with temperature sensor (SA405).
*4: Choose Daielperfrow when this is used in organic solvent, high alkali or high temperature alkaline solution.
*5: Mark band is shown by numeral and M3 ring terminals are used. When terminal box is used, select WTB10-PH4.
*6: Mark band is shown by numeral and M4 ring terminals are used. When terminal box is used, select WTB10-PH6.

● Hydrofluoric Acid-Resistant pH Sensor

Model	Suffix Code	Option Code	Specifications
HF405	.....	.....	Hydrofluoric acid-resistant pH sensor
Insertion Length	**-120**	.....	120 mm
Option	For PH200/ PH400 Cable Length *1	**/01**	1 m (Fork terminal)
		/03	3 m (Fork terminal)
		/05	5 m (Fork terminal)
		/10	10 m (Fork terminal)
		/15	15 m (Fork terminal)
		/20	20 m (Fork terminal)
	For PH202/ FLXA21 Cable Length *2	**/01E**	1 m (Pin terminal)
		/03E	3 m (Pin terminal)
		/05E	5 m (Pin terminal)
		/10E	10 m (Pin terminal)
		/15E	15 m (Pin terminal)
		/20E	20 m (Pin terminal)
	For FLXA21 Cable Length *6	**/01F**	1 m (M4 ring terminal)
		/03F	3 m (M4 ring terminal)
		/05F	5 m (M4 ring terminal)
		/10F	10 m (M4 ring terminal)
		/15F	15 m (M4 ring terminal)
		/20F	20 m (M4 ring terminal)
	For PH450G, PH202/TB Cable Length *5	**/01G**	1 m (M3 ring terminal)
		/03G	3 m (M3 ring terminal)
		/05G	5 m (M3 ring terminal)
		/10G	10 m (M3 ring terminal)
		/15G	15 m (M3 ring terminal)
		/20G	20 m (M3 ring terminal)
	Adapter *3	**/S3**	Stainless steel
		/PP	Polypropylene
		/PV	Rigid polyvinyl-chloride
	O-ring	**/PF**	Daielperfrow *4

*1: Mark band is shown by mark and fork terminals are used.
*2: Mark band is shown by numeral and pin terminals are used.
*3: This is needed when using submersion type or flow-through type holder. However this is not needed when using adapter with temperature sensor (SA405).
*4: Choose Daielperfrow when this is used in organic solvent, high alkali or high temperature solution.
*5: Mark band is shown by numeral and M3 ring terminals are used. When terminal box is used, select WTB10-PH4.
*6: Mark band is shown by numeral and M4 ring terminals are used. When terminal box is used, select WTB10-PH6.

● Adapter with Temperature Sensor (for pH Meter)

Model	Suffix Code	Option Code	Specifications
SA405	.....	.....	Adapter with temperature sensor
Measuring System	**-A**	.....	for PH200/PH400 *1
	-E	.....	for PH202/FLXA21 *2
	-F	.....	for FLXA21 *4
	-G	.....	for PH450G,PH202/TB *3
Material of Temp. Sensor Cover/ Adapter	**-HC**	.....	Hastelloy C / Hastelloy C
	-S3	.....	Stainless steel / PEEK
	-TN	.....	Titanium / Titanium
Cable Length	**-01**	.....	1 m
	-03	.....	3 m
	-05	.....	5 m
	-10	.....	10 m
	-15	.....	15 m
	-20	.....	20 m

*1: Mark band is shown by mark and fork terminals are used.
*2: Mark band is shown by numeral and pin terminals are used.
*3: Mark band is shown by numeral and M3 ring terminals are used. When terminal box is used, select WTB10-PH4.
*4: Mark band is shown by numeral and M4 ring terminals are used. When terminal box is used, select WTB10-PH6.
(Note) Use O-ring covered by Teflon (K9148MR) when using a special holder for electrolytic processes.

● pH Sensor for Small Culture Tanks

Model	Suffix Code	Option Code	Specifications
DPAS405	.....	.....	pH sensor for small culture tanks
Insertion Length *1	**-120**	.....	120 mm
	-200	.....	200 mm
	-325	.....	325 mm
Option	For PH200/ PH400 Cable Length *2	**/03**	3 m
		/05	5 m
		/10	10 m
		/15	15 m
		/20	20 m
	For PH202 Cable Length *3	**/03E**	3 m
		/05E	5 m
		/10E	10 m
		/15E	15 m
		/20E	20 m
	O-ring	**/PF**	Daielperfrow *4

*1: Use silicon bush or socket (DIN Pg13.5 female) for an insertion length of 120mm and 200mm.
*2: Mark band is shown by mark and fork terminals are used.
*3: Mark band is shown by numeral and pin terminals are used.
*4: Choose Daielperfrow when this is used in organic solvent, high alkali or high temperature solution.

2. ORP Sensor

● KCl Refillable Type ORP Sensor

Model	Suffix Code	Option Code	Specifications
OR8ERG	.....	.....	KCl Refillable Type ORP Sensor
Electrode	**-AU**	.....	Gold
	-PT	.....	Platinum
Cable Length	**-03**	.....	3m
	-05	.....	5m
	-07	.....	7m
	-10	.....	10m
	-15	.....	15m
	-20	.....	20m
Measuring System	**-N**	.....	For OR200/OR400 *1
	-E	.....	For PH202/FLXA21 *2
	-F	.....	For FLXA21 *5
	-B	.....	For OR100 *3
	-G	.....	For PH450G,PH202/TB *4
Style	***A**	.....	Style A

*1: Mark band is shown by mark and fork terminals are used.
*2: Mark band is shown by numeral and pin terminals are used.
*3: The tag which indicated the color, the sign, and the number is attached to the cable of a sensor.
*4: Mark band is shown by numeral and M3 ring terminals are used. When terminal box is used, select WTB10-PH3.
*5: Mark band is shown by numeral and M4 ring terminals are used. When terminal box is used, select WTB10-PH5.

● KCl Filling Type ORP Sensor

Model	Suffix Code	Option Code	Specifications
OR8EFG	.....	.....	KCl Filling Type ORP Sensor
Electrode	**-AU**	.....	Gold
	-PT	.....	Platinum
Cable Length and KCl Tube Length	**-03**	.....	3 m
	-05	.....	5 m
	-07	.....	7 m
	-10	.....	10 m
	-15	.....	15 m
	-20	.....	20 m
KCl Reserve Tank *1	**-TT1**	.....	For general purpose (250 mL solution inlet)
	-TT2	.....	For medium pressure *2
	-TN1	.....	For maintenance (for TT1)
	-TN2	.....	For maintenance (for TT2)
Measuring System	**-N**	.....	For OR200/OR400 *3
	-E	.....	For PH202/FLXA21 *4
	-F	.....	For FLXA21 *7
	-B	.....	For OR100 *5
	-G	.....	For PH450G.PH202/TB *6
Style	***A**	.....	Style A

*1: A 50A (2-inch) pipe mounting bracket is supplied with TT1 and TT2. Only a supply tube, but no KCl solution, is supplied with TN1 and TN2. Since a KCl solution is not supplied with TT2, arrange it from among accessories or auxiliary parts.
*2: Prepare an air pressure regulator as shown in the diagram below when the medium-pressure reserve tank is used.

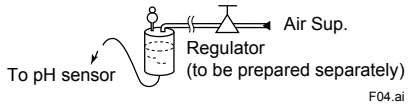

*3: Mark band is shown by mark and fork terminals are used.
*4: Mark band is shown by numeral and pin terminals are used.
*5: The tag which indicated the color, the sign, and the number is attached to the cable of a sensor.
*6: Mark band is shown by numeral and M3 ring terminals are used. When terminal box is used, select WTB10-PH3.
*7: Mark band is shown by numeral and M4 ring terminals are used. When terminal box is used, select WTB10-PH5.

● Solid Electrolyte ORP Sensor (Xerolyt)

Model	Suffix Code	Option Code	Specifications
HA485	.....	.....	Solid electrolyte ORP sensor
Insertion Length	**-120**	.....	120 mm
Option	For OR200/OR400 Cable Length *1	**/01**	1 m (Fork terminal)
		/03	3 m (Fork terminal)
		/05	5 m (Fork terminal)
		/10	10 m (Fork terminal)
		/15	15 m (Fork terminal)
		/20	20 m (Fork terminal)
	For PH202/FLXA21 Cable Length *2	**/01E**	1 m (Pin terminal)
		/03E	3 m (Pin terminal)
		/05E	5 m (Pin terminal)
		/10E	10 m (Pin terminal)
		/15E	15 m (Pin terminal)
		/20E	20 m (Pin terminal)
	For FLXA21 Cable Length *5	**/01F**	1 m (M4 ring terminal)
		/03F	3 m (M4 ring terminal)
		/05F	5 m (M4 ring terminal)
		/10F	10 m (M4 ring terminal)
		/15F	15 m (M4 ring terminal)
		/20F	20 m (M4 ring terminal)
	For PH450G, PH202/TB Cable Length *4	**/01G**	1 m (M3 ring terminal)
		/03G	3 m (M3 ring terminal)
		/05G	5 m (M3 ring terminal)
		/10G	10 m (M3 ring terminal)
		/15G	15 m (M3 ring terminal)
		/20G	20 m (M3 ring terminal)
	Adapter *3	**/S3**	Stainless steel
		/PP	Polypropylene
		/PV	Rigid polyvinyl-chloride

*1: Mark band is shown by mark and fork terminals are used.
*2: Mark band is shown by numeral and pin terminals are used.
*3: This is needed when using submersion type or flow-through type holder.
*4: Mark band is shown by numeral and M3 ring terminals are used. When terminal box is used, select WTB10-PH3.
*5: Mark band is shown by numeral and M4 ring terminals are used. When terminal box is used, select WTB10-PH5.

● ORP Sensors for Chemical Processes

Model	Suffix Code	Option Code	Specifications
DPA485	·····	·····	ORP sensor for chemical prpcess
Insertion Length	**-120**	·····	120 mm
Option	For OR200/ OR400 Cable Length *1	**/01**	1 m (Fork terminal)
		/03	3 m (Fork terminal)
		/05	5 m (Fork terminal)
		/10	10 m (Fork terminal)
		/15	15 m (Fork terminal)
		/20	20 m (Fork terminal)
	For PH202/ FLXA21 Cable Length *2	**/01E**	1 m (Pin terminal)
		/03E	3 m (Pin terminal)
		/05E	5 m (Pin terminal)
		/10E	10 m (Pin terminal)
		/15E	15 m (Pin terminal)
		/20E	20 m (Pin terminal)
	For FLXA21 Cable Length *5	**/01F**	1 m (M4 ring terminal)
		/03F	3 m (M4 ring terminal)
		/05F	5 m (M4 ring terminal)
		/10F	10 m (M4 ring terminal)
		/15F	15 m (M4 ring terminal)
		/20F	20 m (M4 ring terminal)
	For PH450G, PH202/TB Cable Length *4	**/01G**	1 m (M3 ring terminal)
		/03G	3 m (M3 ring terminal)
		/05G	5 m (M3 ring terminal)
		/10G	10 m (M3 ring terminal)
		/15G	15 m (M3 ring terminal)
		/20G	20 m (M3 ring terminal)
	Adapter *3	**/S3**	Stainless steel
		/PP	Polypropylene
		/PV	Rigid polyvinyl-chloride
		/HPV	Heat-resistant polyvinyl-chloride
		/TN	Titanium

*1: Mark band is shown by mark and fork terminals are used.
*2: Mark band is shown by numeral and pin terminals are used.
*3: This is needed when using submersion type or flow-through type holder.
*4: Mark band is shown by numeral and M3 ring terminals are used. When terminal box is used, select WTB10-PH3.
*5: Mark band is shown by numeral and M4 ring terminals are used. When terminal box is used, select WTB10-PH5.

● ORP Sensor for Small Culture Tanks

Model	Suffix Code	Option Code	Specifications
DPAS485	·····	·····	ORP sensor for chemical prpcess
Insertion Length *1	**-120**	·····	120 mm
	-200	·····	200 mm
	-325	·····	325 mm
Option	For OR200/ OR400 Cable Length *2	**/03**	3 m
		/05	5 m
		/10	10 m
		/15	15 m
		/20	20 m
	For PH202 Cable Length *3	**/03E**	3 m
		/05E	5 m
		/10E	10 m
		/15E	15 m
		/20E	20 m

*1: Use silicon bush or socket (DIN Pg13.5 female) for an insertion length of 120 mm and 200 mm.
*2: Mark band is shown by mark and fork terminals are used.
*3: Mark band is shown by numeral and pin terminals are used.

3. pH Measuring System for High Purity Water

● pH Sensor for High Purity Water

Model	Suffix Code	Option Code	Specifications
PH8EHP	·····	·····	pH sensor for high purity water
Cable Length	**-03**	·····	3 m
	-05	·····	5 m
	-07	·····	7 m
	-10	·····	10 m
	-15	·····	15 m
	-20	·····	20 m
Solution Ground Tip	**-TN**	·····	Titanium
KCl Reserve Tank *1	**-TT1**	·····	For general purpose (250 mL solution inlet)
	-TT3	·····	Big volume tank (With 500 mL tank)
	-TN1	·····	For maintenance (for TT1)
–	**-N**	·····	Always -N
Measuring System	**-H**	·····	For PH200/PH400 *2
	-E	·····	For PH202/FLXA21 *3
	-F	·····	For FLXA21 *5
	-G	·····	For PH450G,PH202/TB *4
Style	***A**	·····	Style A

*1: Only a KCl supply tube is supplied with TN1. KCl solution is supplied with TT1 and TT3.
*2: Mark band is shown by mark and fork terminals are used.
*3: Mark band is shown by numeral and pin terminals are used.
*4: Mark band is shown by numeral and M3 ring terminals are used. When terminal box is used, select WTB10-PH3.
*5: Mark band is shown by numeral and M4 ring terminals are used. When terminal box is used, select WTB10-PH5.

● pH Holder for High Purity Water

Model	Suffix Code	Option Code	Specifications
PH8HH	·····	·····	pH Holder for High Purity Water, wall-mount type
Connection ports	**-JPT**	·····	Rc1/4 (Inlet), Rc1/2 (Outlet)
	-NPT	·····	1/4NPT (Inlet), 1/2NPT (Outlet)
–	**-H**	·····	Always -H
Style	***A**	·····	Style A
Option	Mounting Bracket	**/P**	Pipe mounting bracket

4. Terminal Box

● Terminal Box

Model	Suffix Code	Option Code	Specifications
WTB10	.....	.....	Terminal box
Combined System	**-PH1**	.....	For PH202, FLXA21 (General sensor of pin terminals)
	-PH2	.....	For PH202, FLXA21 (Special sensor, of pin terminals) *1
	-PH3	.....	For PH450G, PH202/TB (General sensor) *4
	-PH4	.....	For PH450G, PH202/TB (Special sensor) *1 *4
	-PH5	.....	For FLXA21 (General sensor) *5
	-PH6	.....	For FLXA21 (Special sensor) *1 *5
–	**-NN**	.....	Always -H
Cable Length (*2)	**-00**	.....	0 m *3
	-05	.....	5 m
	-10	.....	10 m
	-15	.....	15 m
Option	Mounting Bracket	**/P**	Pipe mounting bracket
		/W	Wall mounting bracket
	Conduit Adapter	**/AWTB**	G1/2
		/ANSI	1/2NPT

*1: Use -PH2, -PH4, -PH6 of combined system when using adapter with temperature sensor (SA405) is used.
*2: For WTB10 of combined system, maximum cable length including sensor cable length should be 20 m.
*3: The dedicated extension cable should be used.
*4: M3 screw terminals and cable with M3 ring terminals are used.
*5: M4 screw terminals and cable with M4 ring terminals are used.

5. Accessories

● Accessories for pH Meter

Model	Suffix Code	Option Code	Specifications
PH8AX	.....	.....	Accessories for pH meter *1
Calibration Reagents	**-L**	.....	Two bottles, each containing 250 mL solution (pH7 and pH4)
	-P	.....	24 bags, each bag containing powder for 500 mL solution (pH7 X 12 bags and pH4 X 12 bags) and two 500 mL polyethylene bottles.
Style	***A**	.....	Style A
Option *2		**/STD**	Sensor stand (with mounting bracket for 50A 2-inch pipe)
		/KCLL	KCl solution (one 250 mL polyethylene bottle)
		/KCLP	KCl powder (three bags, 250 mL solution each)
		/TMP	Thermometer (0 to 100°C)

*1: Including the following:
Two 200 mL polyethylene cups
One cleaning bottle
*2: Either /KCLL or /KCLP is required for PH8EFP-□-□-TT2.

● Accessories for ORP Meter

Model	Suffix Code	Option Code	Specifications
OR8AX	.....	.....	Accessories for ORP meter *1
Style	***A**	.....	Style A
Option *2		**/STD**	Sensor stand (with mounting bracket for 50A 2-inch pipe)
		/KCLL	KCl solution (one 250 mL polyethylene bottle)
		/KCLP	KCl powder (three bags, 250 mL solution each)
		/TMP	Thermometer (0 to 100°C)

*1: Including the following:
Two 200 mL polyethylene cups
One cleaning bottle
One pack of quinhydrone reagent powder (three bags, 250 mL solution each)
One 250 mL polyethylene bottle
*2: Either /KCLL or /KCLP is required for PH8EFP-□-□-TT2.

6. Spare Parts

● Spare Parts for pH Meter

Part Name		Part Number	Remarks
Glass electrode	General purpose	K9142TN	One for PH8ERP, PH8EFP, PH8EHP
		K9319NA	One for PH8ERP/PF, PH8EFP/PF
	Certified version	K9142TP	One for PF8EFP
		K9319NB	One for PH8EFP/PF
	High alkali	K9142TU	One for PH8EFP/HA
		K9319NC	One for PH8EFP/HA, /PF
Junction	General purpose	K9142TH	One for PH8ERP, PH8EFP
		K9319QA	One for PH8ERP, PH8EFP/PF
	High purity water	K9142TK	One for PH8EHP
	Teflon	K9142HW	One for PH8EFP/TF
		K9319QB	One for PH8EFP/TF/PF
Cable with M4 ring terminal for FLXA21	1 m	K9148XA	for HA405,DPA405,HF405
	3 m	K9148XB	for HA405,DPA405,HF405
	5 m	K9148XC	for HA405,DPA405,HF405
	10 m	K9148XD	for HA405,DPA405,HF405
	15 m	K9148XE	for HA405,DPA405,HF405
	20 m	K9148XF	for HA405,DPA405,HF405

Spare Parts for pH Meter

Part Name		Part Number	Remarks
Cable with M3 ring for PH202/ TB PH450G *1	1 m	K9148WA	for HA405,DPA405,HF405
	3 m	K9148WB	for HA405,DPA405,HF405
	5 m	K9148WC	for HA405,DPA405,HF405
	10 m	K9148WD	for HA405,DPA405,HF405
	15 m	K9148WE	for HA405,DPA405,HF405
	20 m	K9148WF	for HA405,DPA405,HF405
Cable with fork terminal for PH200/ PH400	1 m	K9148KE	for HA405,DPA405,HF405
	3 m	K9148KF	for HA405,DPA405,HF405
	5 m	K9148KG	for HA405,DPA405,HF405
	10 m	K9148KH	for HA405,DPA405,HF405
	15 m	K9148KJ	for HA405,DPA405,HF405
	20 m	K9148KK	for HA405,DPA405,HF405
	3 m	K9148RB	for DPAS405
	5 m	K9148RC	for DPAS405
	10 m	K9148RD	for DPAS405
	15 m	K9148RE	for DPAS405
	20 m	K9148RF	for DPAS405
Cable with pin terminal for PH202/ FLXA21	1 m	K9148VA	for HA405,DPA405,HF405
	3 m	K9148VB	for HA405,DPA405,HF405
	5 m	K9148VC	for HA405,DPA405,HF405
	10 m	K9148VD	for HA405,DPA405,HF405
	15 m	K9148VE	for HA405,DPA405,HF405
	20 m	K9148VF	for HA405,DPA405,HF405
	3 m	K9148VH	for DPAS405
	5 m	K9148VJ	for DPAS405
	10 m	K9148VK	for DPAS405
	15 m	K9148VL	for DPAS405
	20 m	K9148VM	for DPAS405
Adapter	316 SS	K9148NA	for HA405, HA406, DPA405, DPA406, HF405
	Polypropylene	K9148NB	for HA405, HA406, DPA405, DPA406, HF405
	Rigid polyvinyl-chloride	K9148NC	for HA405, HA406, DPA405, DPA406, HF405
	Heat-resistant polyvinyl-chloride	K9148ND	for DPA405, DPA406
KCl solution (3.3 mol/L)		K9084LP	Six 250 mL polyethylene bottles
Buffer solution for calibration (pH4)		K9084LL	Six 250 mL polyethylene bottles
Buffer solution for calibration (pH7)		K9084LM	Six 250 mL polyethylene bottles
Buffer solution for calibration (pH9)		K9084LN	Six 250 mL polyethylene bottles
Powder for buffer solution (pH4)		K9020XA	12 bags,each for preparation of 500 mL
Powder for buffer solution (pH7)		K9020XB	12 bags, each for preparation of 500 mL
Powder for buffer solution (pH9)		K9020XC	12 bags, each for preparation of 500 mL
KCl powder (for PH8EFP, PH8EHP)		K9020XU	8 bags, each for preparation of 250 mL
KCl powder (for PH8ERP)		K9142UT	2 bags, 1 bottle of 3.3 mol/L KCl, 1 syringe

*1 Applicable terminal box are WTB10-PH3 or WTB10-PH4.

(Note): The pH value of the calibrating buffer solution may vary depending on storage conditions.
Prepare a new solution from powder for accurate instrument calibration

Spare Parts for ORP Meter

Part Name		Part Number	Remarks
Sensor	Platinum	K9142TS	One for OR8ERG,OR8EFG
	Gold	K9142TT	One for OR8ERG,OR8EFG
Junction		K9142TH	One for OR8ERG,OR8EFG
Cable with fork terminal for OR200/ OR400	1 m	K9148KE	for HA485,DPA485
	3 m	K9148KF	for HA485,DPA485
	5 m	K9148KG	for HA485,DPA485
	10 m	K9148KH	for HA485,DPA485
	15 m	K9148KJ	for HA485,DPA485
	20 m	K9148KK	for HA485,DPA485
	3 m	K9148RB	for DPAS485
	5 m	K9148RC	for DPAS485
	10 m	K9148RD	for DPAS485
	15 m	K9148RE	for DPAS485
	20 m	K9148RF	for DPAS485
Adapter	SS	K9148NA	for HA485,DPA485
	PP	K9148NB	for HA485,DPA485
	PVC	K9148NC	for HA485,DPA485
	HPVC	K9148ND	for DPA485
	Titanium	K9148NE	for DPA485

Part Name		Part Number	Remarks
Cable with M4 ring terminal for FLXA21	1 m	K9148XA	for HA485,DPA485
	3 m	K9148XB	for HA485,DPA485
	5 m	K9148XC	for HA485,DPA485
	10 m	K9148XD	for HA485,DPA485
	15 m	K9148XE	for HA485,DPA485
	20 m	K9148XF	for HA485,DPA485
Cable with M3 ring terminal for PH202/ TB PH450G	1 m	K9148WA	for HA485,DPA485
	3 m	K9148WB	for HA485,DPA485
	5 m	K9148WC	for HA485,DPA485
	10 m	K9148WD	for HA485,DPA485
	15 m	K9148WE	for HA485,DPA485
	20 m	K9148WF	for HA485,DPA485
Cable with pin terminal for PH202/ FLXA21	1 m	K9148VA	for HA485,DPA485
	3 m	K9148VB	for HA485,DPA485
	5 m	K9148VC	for HA485,DPA485
	10 m	K9148VD	for HA485,DPA485
	15 m	K9148VE	for HA485,DPA485
	20 m	K9148VF	for HA485,DPA485
	3 m	K9148VH	for DPAS485
	5 m	K9148VJ	for DPAS485
	10 m	K9148VK	for DPAS485
	15 m	K9148VL	for DPAS485
	20 m	K9148VM	for DPAS485
KCl solution (3.3 mol/L)		K9084LP	Six 250 mL polyethylene bottles
KCl powder (for OR8EFG)		K9020XU	8 bags, each for preparation of 250 mL
KCl powder (for OR8ERG)		K9142UT	2 bags 1 bottle of 3.3 mol/L KCl, 1 syringe
Reagent for check	Quinhydrone	K9024EC	3 bags, each for preparation of 250 mL
	Iron	K9024ED	3 bags, each for preparation of 250 mL

■ WIRING DIAGRAMS

General purpose pH sensor

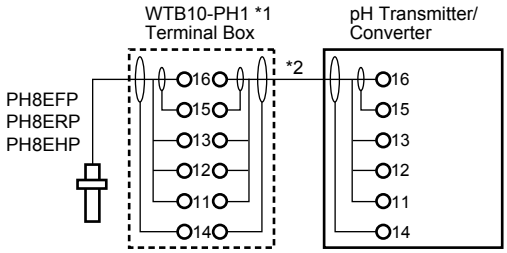

General purpose ORP sensor

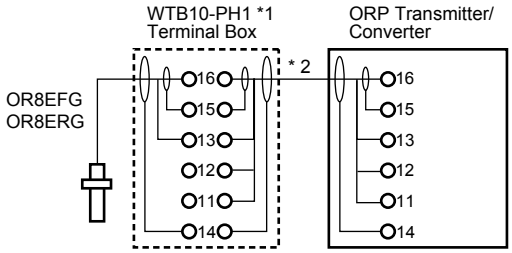

Special pH sensor

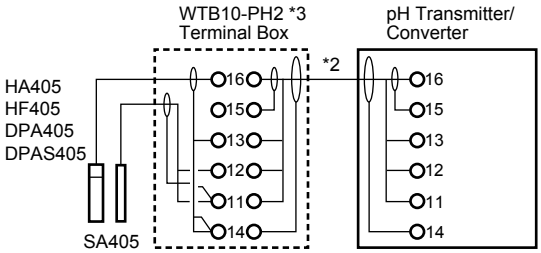

Special ORP sensor

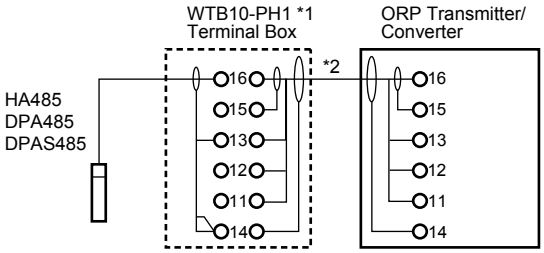

*1 : Terminal box is used only where pH/ORP transmitter is installed remotely from pH or ORP sensor (normally not needed).
When combined PH450G, PH202/TB, use WTB10-PH3 terminal box. When combined by M4 ring terminals with FLXA21, use WTB10-PH5 terminal box.

*2 : This cable is specified in the option code for the terminal box.

*3 : Should be used when using combined PH202G, FLXA21 and SA405. When combined PH450G, PH202/TB and SA405, use WTB10-PH4 terminal box.
When combined by M4 ring terminals with FLXA21 and SA405, use WTB10-PH6 terminal box.

F05.ai

■ DIMENSIONS

Unit : mm

KCl refillable pH/ORP sensor
PH8ERP-□
OR8ERG-□

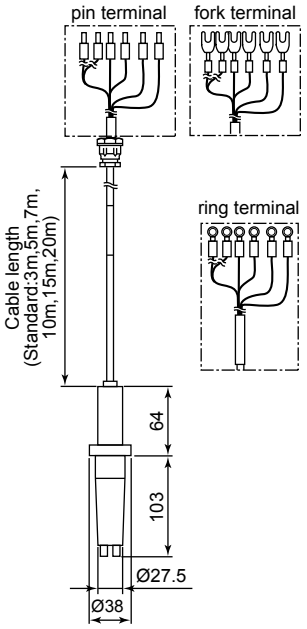

KCl filling pH/ORP sensor
PH8EFP-□
OR8EFG-□

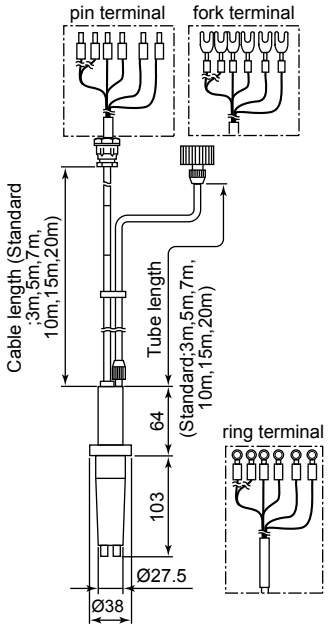

pH sensor for pure water
PH8EHP-□

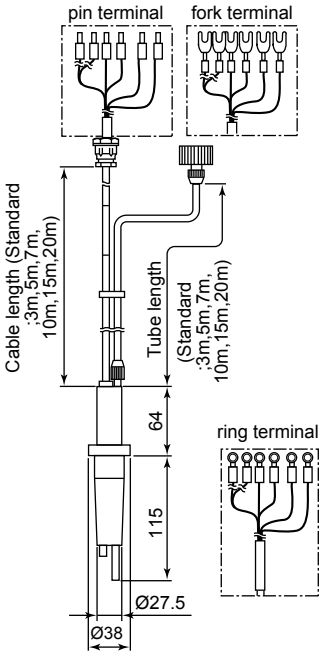

(Note) Numbers of terminal for ORP sensor is four.

General purpose KCl reserve tank for KCl filling pH/ORP sensor and pH sensor for high purity water (with mounting bracket)
(PH8EFP-□)-TT1
(PH8EHP-□)-TT1
(OR8EFG-□)-TT1

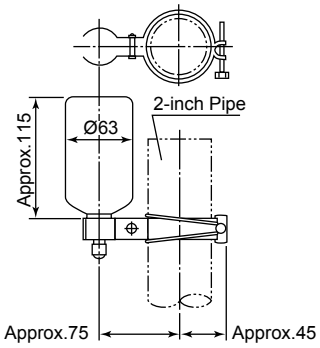

Medium pressure KCl reserve tank for KCl filling pH/ORP sensor (with mounting bracket)
(PH8EFP-□)-TT2
(OR8EFG-□)-TT2

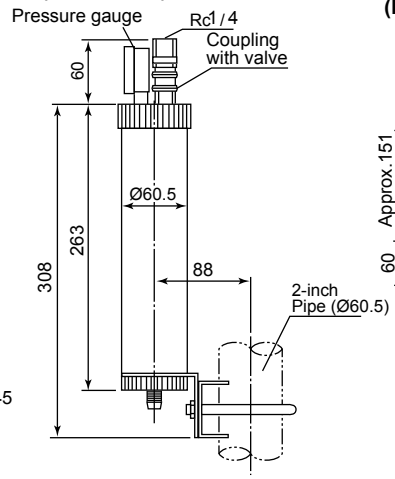

Big volume tank KCl reserve tank for KCl filling pH sensor and pH sensor for high purity water. (with mounting bracket)
(PH8EFP-□)-TT3
(PH8EHP-□)-TT3

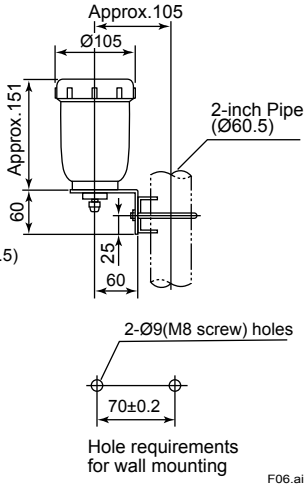

Holder for high purity water PH8HH

Unit : mm

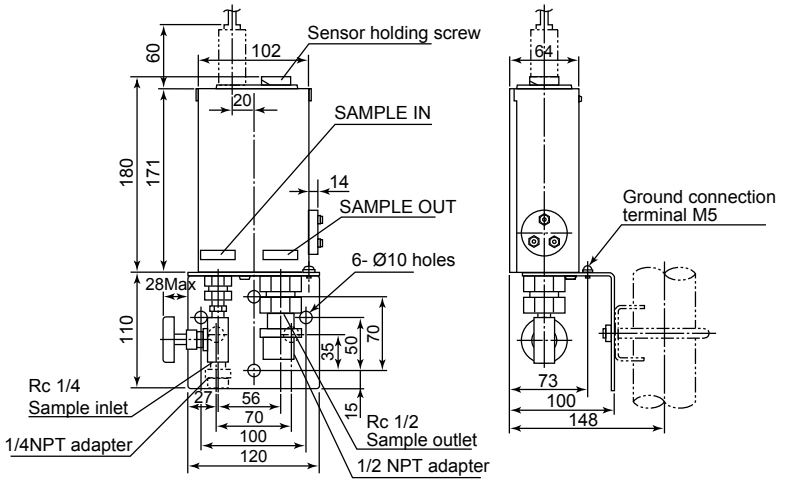

Hole dimensions for Holder mounting

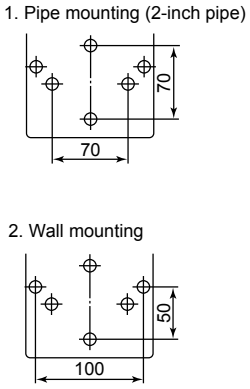

F07.ai

Unit : mm

Solid electrolyte pH sensor (Xerolyt) HA405

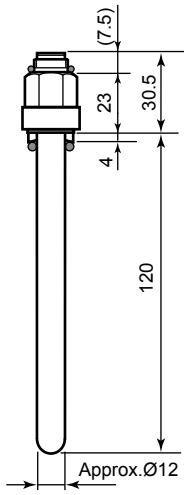

Solid electrolyte ORP sensor (Xerolyt) HA485

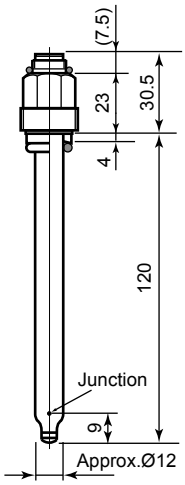

Hydrfluoric Acid-Resistant pH sensor HF405

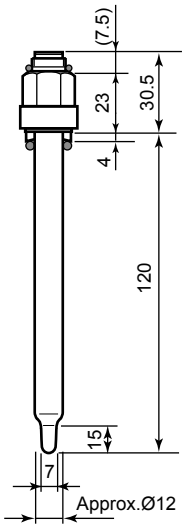

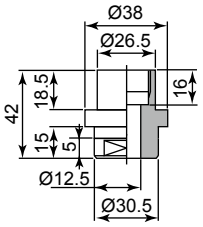

Adapter

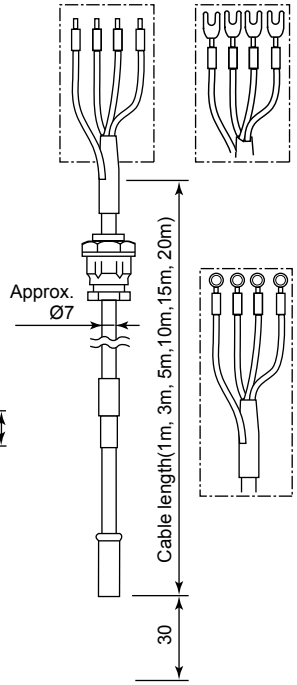

pH sensors for chemical processes DPA405

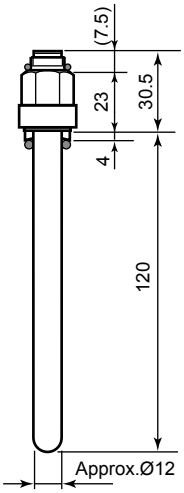

ORP sensors for chemical processes DPA485

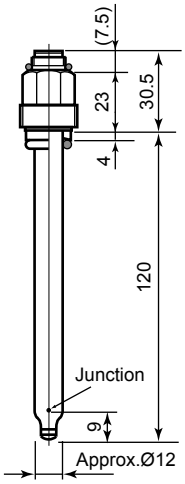

F08.ai

pH sensors for small culture tanks DPAS405

ORP sensors for small culture tanks DPAS485

Unit : mm

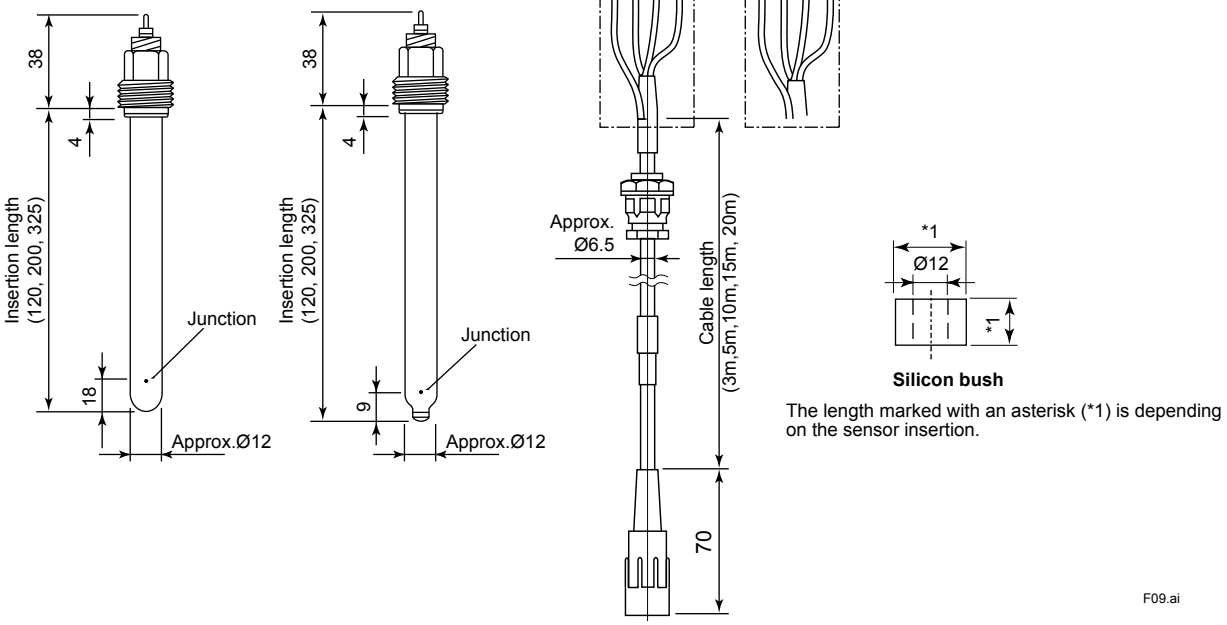

Silicon bush

The length marked with an asterisk (*1) is depending on the sensor insertion.

F09.ai

Adapter with temperature sensor for pH sensor SA405

Unit : mm

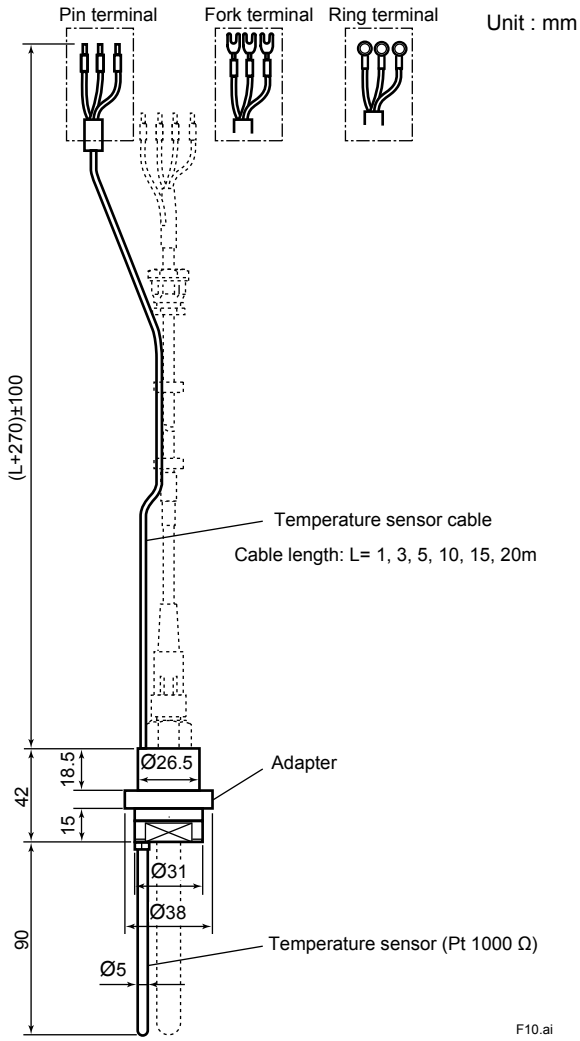

F10.ai

Sensor stand (PH8AX-□)/STD (OR8AX-□)/STD

Unit : mm

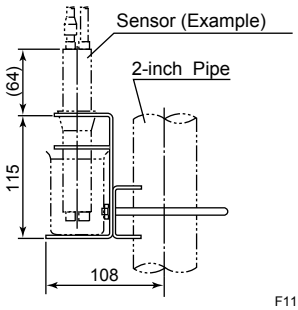

F11.ai

Unit : mm

Terminal box WTB10-PH1, -PH3, -PH5

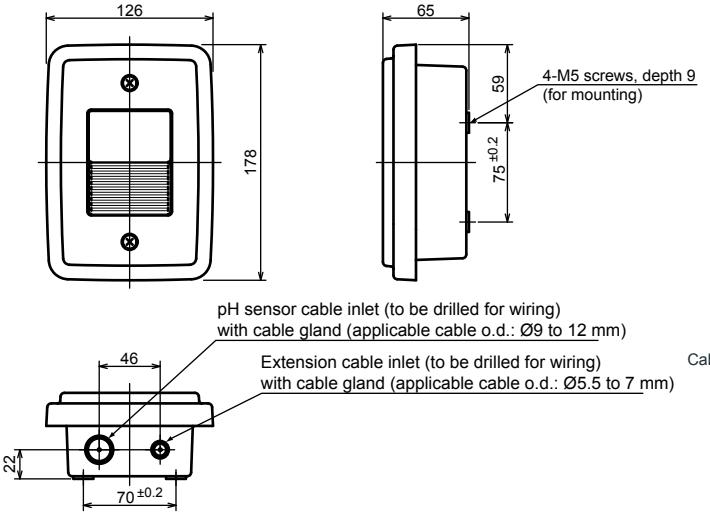

Conduit adapter

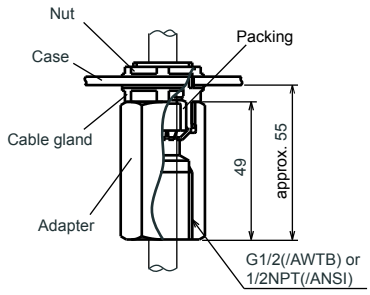

Terminal box WTB10-PH2, -PH4, -PH6

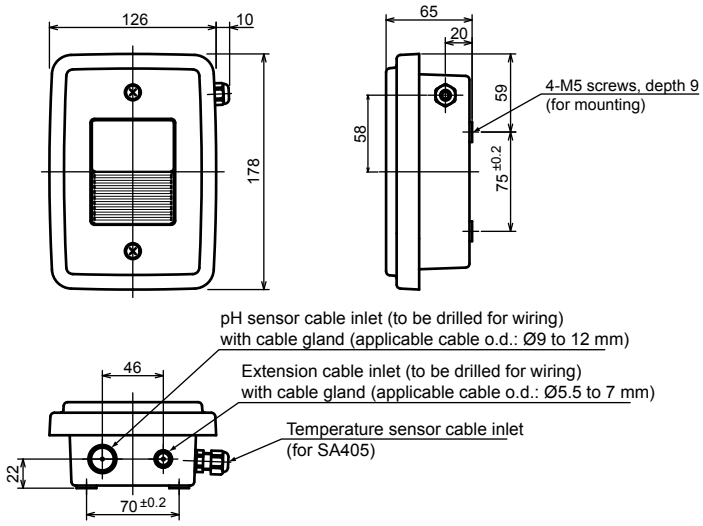

Model and code	L
WTB10 - PH□ - NN - 05	Approx. 5 000
WTB10 - PH□ - NN - 10	Approx. 10 000
WTB10 - PH□ - NN - 15	Approx. 15 000

Extension cable

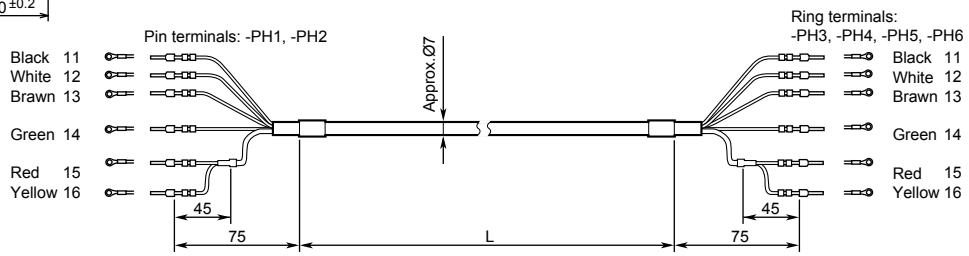

Mounting bracket for terminal box

<Pipe mounting bracket: /P>

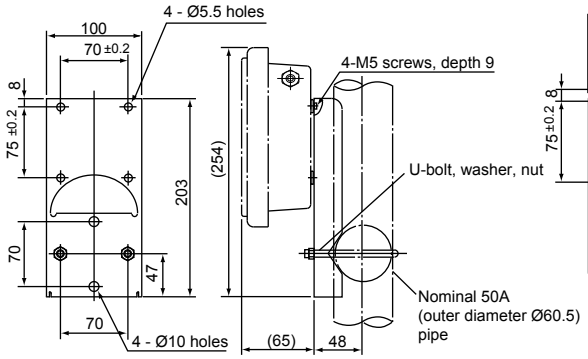

<Wall mounting bracket: /W>

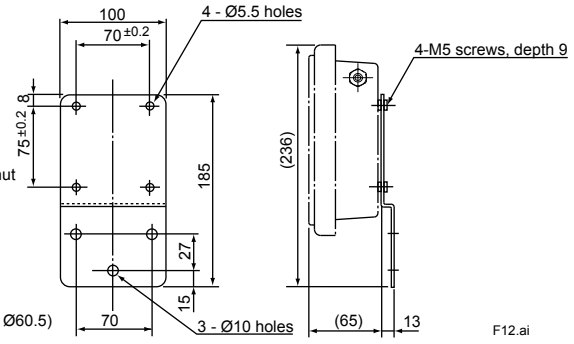

F12.ai

■ SELECTION CRITERIA FOR pH/ORP SENSOR AND HOLDER

<General Overall Criteria>

(1) When any of the two conditions listed below are applicable, select a KCl filling type pH sensor and either the submersion or flow-through type holder.
- The solution is out of the range 2 < pH < 12.
- The solution contains organic or oil in the order of a few percent.

(2) When any of the two conditions listed below are applicable, consult our salesperson.
- Strong oxidizing solutions such as aqua regia, chromic acid , hypochloric acid, perchloric acid.
- The solution contains corrosive gases (ammonia, chlorine, hydrogen sulfide).

<Individual Criteria>

○: Can be used, △:Shortens useful life, ×:Cannot be used

	Chemical	Concentration W/V (%)	pH *1 (25°C)	Holder	
				Flow-through, Submersion	Guide-pipe
Inorganic acid	Sulfuric acid	0.5	1.0	○	×
		0.05	2.0	○	○
	Hydrochloric acid	0.4	1.0	○	×
		0.04	2.0	○	○
	Nitric acid	0.6	1.0	○	×
		0.06	2.0	○	○
	Phosphoric acid	1.0	1.5	○	△
	Boric acid	0.6	5.0	○	○
	Carbonic acid	0.6	3.6	○	△
	Chromic acid	1.2	0.8	○	×
	Sulfurous acid	0.8	1.4	○	△
Organic acid	Acetic acid	0.6	2.8	○	○
	Formic acid	0.5	2.3	○	○
	Oxalic acid	0.9	1.0	○	○
	Lactic acid	0.9	2.4	○	○
	Phenol acid	0.9	5.4	○	△
	Monochloroacetic acid	0.9	1.8	○	×
Alkali	Calcium hydroxide	0.2	12.4	○	○
	Potassium hydroxide	0.5	12.7	○	△
	Sodium hydroxide	0.4	12.9	○	△
Acid salts	Ammonium chloride	5		○	○
	Aluminous water	5		○	○
	Zinc chloride	5		○	○
	Ferric chloride	5		○	○
	Ferric nitrate	5	1.3	○	△
Basic salts	Sodium sulfite	5		○	○
	Sodium carbonate	5	11.8	○	○
	Sodium phosphate	5		○	△
Neutral salts	Potassium chloride	5		○	○
	Sodium sulfate	5		○	○
	Calcium chlorine	5		○	○
	Sodium nitrate	5	8.2	○	×
	Aluminum chloride	5		○	○
Oxdizing agents	Hydrogen peroxide	1		○	○
	Sodium hypochlorite solution	1	12.5	○	△
	Chlorinated lime	1		○	△
	Potassium bichromate	5	4.5	○	○
Organic solvents	Alcohol	10		○	△
	Organic solvent or oil (excluding alcohol)			○	×

*1: pH values in table are calculated from dissociation constant (including measured value).

Table of Corrosion-Resistant Materials (The data should be used for reference only)

Note: This table shows corrosion resistance for each single substance alone. If a sample contains two or more substances, then the corrosion resistance may differ from that given in this table.

◎ : Excellent
○ : Good
△ : Not so good
× : Unusable

		Holder material						Ultrasonic transducer material Sensor solution ground tip						Seal O-ring material	Sensor body material			
		Polypropylene			316 SS			Hastelloy C			Titanium			Viton	Ryton			Remarks
		Concent'n	Temp	Judge	Concent'n	Temp	Judge	Concent'n	Temp	Judge	Concent'n	Temp	Judge		Concent'n	Temp	Judge	
Inorganic acid	Sulfurous acid	100	20	◎	6	30	◎	6	30	○	6	30	◎	Strong acid ◎ Weak acid ◎	–			
			90	◎														
	Hydrochloric acid	5	20	◎	5	30	×	5	30	◎	5	30	◎		5	30	◎	
		5	80	◎							5	b	×		37	60	△	
															37	90	×	
	Chromic acid	20	20	△	10	b	○	20	30	○	10	b	◎		20	20	○	
		20	40	×														
	Hypochlorous Acid	10	20	◎	14	30	×	15	43	◎	20	40	◎		5	20	○	
		10	40	○												40	×	
	Hydrobromic acid		–			–			–		40	30	◎			–		
	Nitric acid	10	20	◎	10	30	◎	10	30	◎	10	100	○		5	20	○	
		10	80	◎											10	60	×	
	Hydroiodic acid	57	20	◎	57	25	×		–		57	30	○			–		
		57	70	◎														
	Sulfuric acid	3	20	◎	6	30	◎	5	30	◎	5	30	◎		90	20	◎	
		3	100	◎	5	100	×	5	70	◎	5	100	×		30	90	○	
	Phosphoric acid	30	60	◎	15	30	◎	5	30	◎	5	30	◎		85	90	◎	
		30	100	△	5	b	◎	5	b	◎	5	60	○					
Alkali	Ammonia water	15	80	◎	10	b	◎	10	b	◎	10	b	◎	Strong alkali × Weak alkali △	15	30	◎	
		15	100	○	28	65	◎	20	65	◎	20	65	◎					
	Potassium hydroxide		–		10	b	◎	10	b	◎	10	b	◎		10	20	◎	
					25	b	◎	25	b	◎	25	b	○		10	90	△	
	Sodium hydroxide	20	80	◎	20	30	◎	20	30	◎	20	30	◎		10	20	◎	
		20	100	◎	20	b	◎	20	b	◎	20	b	◎		10	90	△	
	Sodium hydroxide, Sodium hydroxide9 to 11% +Sodium chloride 15%		100	◎		–			–			93	◎			90	○	
	Potassium carbonate		–		5	b	◎	5	b	◎	5	b	◎		5	b	◎	
					35	b	◎	35	b	◎	35	b	○		35	b	○	
	Sodium carbonate	sat.	100	◎	25	b	◎	25	b	◎	25	b	◎		25	90	◎	
Chlorides	Zinc chloride		–		20	b	△	20	b	◎	20	b	◎	–		–		
	Aluminum chloride		–		25	25	×		–		10	b	◎	–		–		
					25	25	×				25	b	×					
	Ammonium chloride	35	40	◎	25	b	△	25	b	◎	25	b	◎	–	25	90	◎	
	Potassium chloride	sat.	60	◎	sat.	60	◎	sat.	60	◎	sat.	60	◎	–	20	90	◎	
	Calcium chloride	sat.	80	◎	25	b	○	25	b	◎	25	b	◎	–	25	90	◎	
		sat.	100	◎														
	Ferric chloride	20	40	◎	30	b	×	30	b	×	30	b	◎	–	20	60	◎	
		20	60	◎														
	Sodium chloride, 20% + Saturated Cl2 (Electrolysis solution)		100	◎		90	×		90	×		90	◎	–		20	△	
	Seawater, Magnesium chloride		24	◎		24	△					24	◎	–		24	◎	
		sat.	80	◎	42	b	△	42	b	◎	40	b	◎			80	○	
Sulfates	Ammonium sulfate	5	60	◎	20	b	◎	20	b	◎	20	b	◎	–	10	90	◎	Polypropylene may sometimes be eroded by ammonium sulfate crystals
				◎	sat.	30		sat.	30	◎	sat.	30	◎					
	Potassium sulfate		–		10	b	◎	10	b	◎	10	b	◎	–	10	90	◎	
	Sodium sulfate	Corrsion resistance is good for usual salts.			20	b	◎	20	b	◎	20	b	◎	–	10	90	◎	
Nitrates	Ammonium nitrate				20	b	◎	20	b	◎	20	b	◎	–	10	90	◎	
	Sodium nitrate				50	b	◎		–		50	b	◎	–		–		
Others	Sodium sulfite				20	b	◎		–		20	b	◎	–		–		
	Hydrogen peroxide				10	30	◎		–		10	30	◎	–	10	30	◎	
	Sodium sulfide	30	90	◎	2	60-90	×	2	60-90	△	15	30	◎	–	5	90	◎	
		20	80	◎														
	Potassium bichromate				10	b	◎	10	b	◎	10	b	◎	–		–		
	Sodium sulfide	60	80	◎	10	b	◎		–		10	b	◎	–	10	90	◎	
	Sodium bisulfate		–		10	b	△		–		10	b	◎	–		–		
Gases	Wet chlorine gas		20	○		30	×		30	△		30	◎	–		20	×	
			40	△														
			60	×														
	Sea water + Saturated Cl2		–			95	×		95	△		95	◎	–		–		
	Bromine gas		–			–			30	◎		30	◎	–		30	×	
	Hydrogen sulfide		–			20	◎		–			20	◎	–		–		
	Sulfurous acid gas		80	◎		–			–			30-90	◎	–		80	◎	
			100	◎														

(Note): "b" refers to the boiling point.

		Holder material			Ultrasonic transducer material Sensor solution ground tip									Seal O-ring material			Sensor body material			
		Polypropylene			316 SS			Hastelloy C			Titanium			Viton			Ryton			Remarks
		Concent'n	Temp	Judge	Concent'n	Temp	Judge	Concent'n	Temp	Judge	Concent'n	Temp	Judge	Concent'n	Temp	Judge	Concent'n	Temp	Judge	
Organic substances	Acetaldehyde		20	◎	100	30	◎	–			–			–			100	20	○	
	Acetone	100	20	○	50 100	25 110	◎ ◎	–			–			100	25	×	100	b	○	
	Aniline	100 100 100	20 70 100	◎ ○ △	100	25	◎	–			–			–			100	90	○	
	Ether	100	20	△	100	25	◎	–			–			–			100	20	◎	
	Ethylene glycol	100 100	70 100	◎ ◎	100	25	◎	–			–			–			–			
	Ethyl alcohol	96	70	◎	100	b	◎	–			–			–			100	90	◎	
	Methyl chloride	100	20	×	100	25	◎	–			–			–			–			
	Glacial acetic acid	100 100	70 100	◎ ○	–			–			–			100	24	×	100	20	◎	
	Glycerin	100 100	70 100	◎ ◎	100	25	◎	–			–			–			–			
	Chlorophenol	100 100 100	20 70 100	◎ △ ×	–			–			–			–			100	20	◎	
	Xylene	100	20	×	–			–			–			–			100	20	◎	
	Chlorobezene	100 100	20 100	× ×	–			–			–			–			–			
	Chloroform	100	20	×	100	b	◎	100	b	◎	100	b	◎	–			100	90	△	
	Dioxane	100 100 100	20 70 100	◎ △ ×	–			–			–			–			100	90	◎	
	Dichloroethare	100	70	×	–			–			–			–			–			
	Ethyl nitrate	100 100	20	◎ △	100	105	◎	–			–			–			100	90	○	
	Carbon tetrachloride	100	20	×	90	b	△	–			90	b	◎	100	24	×	–			
	Trichloroethylene	100	20	×	100	b	○	100	b	◎	100	b	◎	–			100	90	×	
	Toluene	100	20	×	–			–				145	◎	–			100	90	◎	
	Benzophenone				–			–			–			–			–			
	Benzaldehyde	100 100 100	20 70 100	◎ ○ ×	–			–			–			–			100 100	20 90	△ ×	
	Benzyl alcohol benzene	100	20	◎	100	30	△	–			100	30	○	100	25	○	100	90	◎	
	Fomaldehyde	10 10	70 100	◎ ◎	37	b	◎	37	b	◎	37	b	◎	–			–			
	Methylnaphthelen			◎	–			–			–			–			–			
	Methyl ethyl ketone	100	20 70	○ △	–			–			–			–			100	90	◎	
	Methyl alcohol	100	20	◎	100	25	◎	–			–			–			100	25	◎	
	Nitrobenzene	100 100 100	20 70 100	◎ ○ ×	–			–			–			–			100	90	×	
	Acetic acid	100 100 100	20 70 100	◎ △ ×	10	b	◎	–			10	b	◎	–			–			
	Phenol	100 100	20 100	◎ ○	95	30	◎	95	30	○	95	30	◎	–			100	90	△	
	Benzonic acid	100			–			–			–			–			–			
	Motor oil	100 100 100	20 70 100	◎ ○ △	–			–			–			–			100	20	◎	
	Petroleum ether	100	20	◎	–			–			–			–			100	20	○	
	Kerosene	100 100	20 70	○ ×	–			–				101	◎	–			100	20	○	
	Tartaric acid	10 10 10	40 60 80	◎ ○ △	50	100	△	50	100	△	50	100	◎	–			–			
	Oil and fats	100	70	◎	100	25	◎	100	180	◎	100	180	◎	–			–			
	Carbon sulfide	100	20	×	100	25	◎	–			–			100	25	◎	–			

(Note): “b” refers to the boiling point.

CAUTION

Select the material of wetted parts with careful consideration of process characteristics. Inappropriate selection may cause leakage of process fluids, which greatly affects facilities. Considerable care must be taken particularly in the case of strongly corrosive process fluid such as hydrochloric acid, sulfuric acid, hydrogen sulfide, and sodium hypochlorite. If you have any questions about the wetted part construction of the product, be sure to contact Yokogawa.

Enquiry Specifications Sheet for pH/ORP Sensor

For enquires on the Yokogawa pH/ORP sensors, please tick (v)the appropriate box ☐ and write down the relevant information in the blanks.

1. General Information

Company name ;_____
Contact Person ;_____Department;_____
Plant name ;_____
Measurement location ;_____
Purpose of use ; ☐ Indication, ☐ Recording, ☐ Alarm, ☐ Control
Power supply ;_____V AC,_____Hz

2 Measurement Conditions

(1) Process temperature;_____to_____Normally_____[°C]
(2) Process pressure ;_____to_____Normally_____[kPa]
(3) Flow rate ;_____to_____Normally_____[L/min]
(4) Flow speed ;_____to_____Normally_____[m/s]
(5) Slurry or contaminants ; ☐ No, ☐ Yes_____
(6) Name of process fluid ; _____
(7) Components of process fluid ; _____
(8) Others ; _____

3. Installation Site

(1) Ambient temperature ; _____
(2) Location ; ☐ Outdoors,☐ Indoors_____
(3) Others ; _____

4. Requirements

(1) Measuring range ; ☐ pH 0 to 14, ☐ _____
(2) Combined transmitter ; ☐ FLXA21, ☐ PH202, ☐ PH450, ☐ PH400, ☐ OR400, ☐ PH100, ☐ OR100, ☐ _____
(3) System configuration selection; ☐ Sensor, ☐ Holder, ☐ pH/ORP Transmitter/Converter, ☐ Cleaning system, ☐ Terminal box, ☐ Accessories
(4) Sensor cable length ; ☐ 3 m, ☐ 5 m, ☐ 7 m, ☐ 10 m, ☐15 m, ☐ 20 m, ☐_____m
(5) Sensor operating pressure ; ☐10 kPa or less, ☐ Greater than 10 kPa
(6) Type of holder ; ☐ Guide pipe, ☐ Submersion, ☐ Flow-through, ☐ Suspension, ☐ Angled floating ball, ☐ Vertical floating ball
(7) Cleaning method ; ☐ No cleaning, ☐ Ultrasonic cleaning, ☐ Jet cleaning, ☐ Brush cleaning
(8) Sample temperature ; ☐ -5 to 105°C, ☐ -5 to 100°C, ☐ -5 to 80°C
(9) Others ; _____